GRID Architecture through a Public Cluster

Z. Akbar and L.T. Handoko

Group for Theoretical and Computational Physics,
Research center for Physics,
Indonesian Institute of Sciences,
Komplek Puspiptek Serpong, Tangerang 15310, Indonesia

http://teori.fisika.lipi.go.id

LIPI Public Cluster (LPC)

- Parallel machine which is open for public use
- Provides full ownership to the user on a block consisting of several nodes → Multi Block approach → Much higher degree of freedoms to control their own nodes
- Microcontroller-based remote control and monitoring for hardware
- Web-based Interface

LPC vs. Conventional Cluster

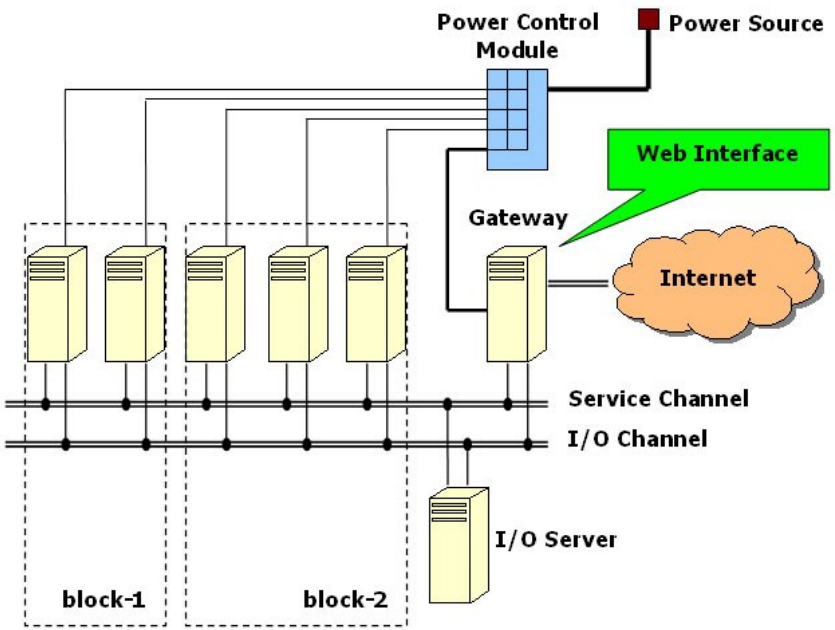

- Providing real training field to any aspects of Parallel Computing ← not only Parallel Programming
- Implementing various Parallel Environments
- Efficiency → nodes able to completely turned on/off

Participating in GRID

- A user at a certain allocated period fully owns a block of nodes → the resource management system is irrelevant in LPC
- Connecting a block as a participating node in a global grid :
  - Need local resource allocation management (defacto)
  - Require a tool to guide a request from partner grid to be forwarded properly to an appropriate block
- We develop a “router web service” to reroute the incoming request to an appropriate block

Concept

Connecting a block in LPC to a grid simultaneously requires :

- A Grid Middleware → Globus Toolkit version 4 (GT4), LCG-2/gLite, etc.
- A smart authentication method to reroute any requests from separate grids to appropriate blocks in LPC

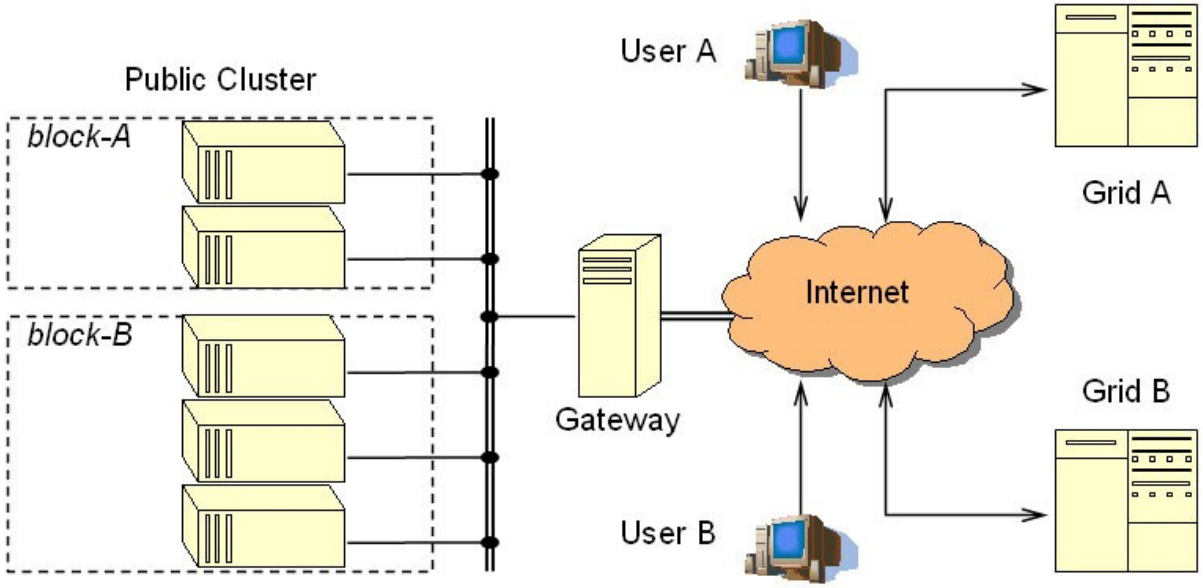

Problems

- In LPC, the whole nodes in a block is allocated for a single user (fully controllable as if the user has their own parallel machine) → no need to deploy a resource management tool at all
- All available nodes are already assigned in several independent (owned by different user and may deploy various middleware according to user needs) blocks

➔ Block is going to be involved in a global grid and some blocks are connected to different grids → how to forward a request to the block appropriately

➔ We should deploy a resource management tool to identify a name for the block (e.g. a queue name in PBS)

How to specify each incoming request with a label to reroute it to the appropriate block through GT properly.

Implementation /1

Web Service Public Cluster (WSPC) :

- Authenticate the digital certificate contained in the requests
- Retrieve the username and map it with the queue name associated with particular block

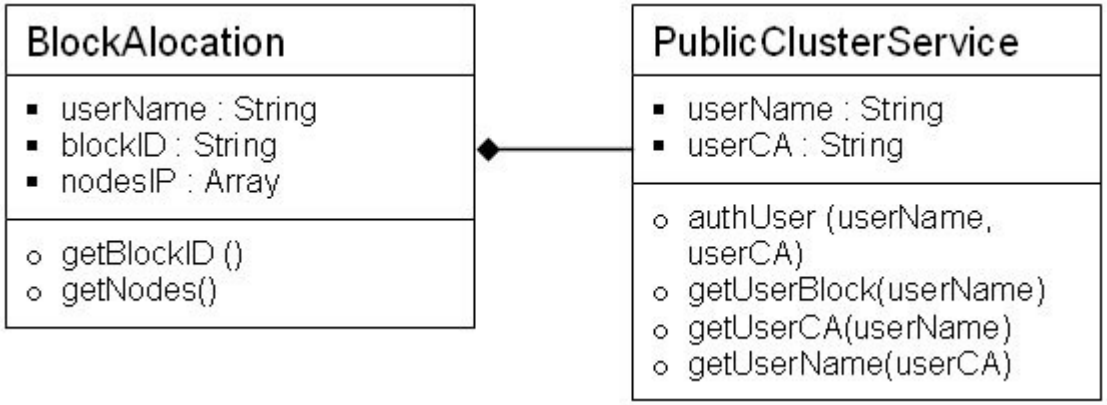

Implementation /2

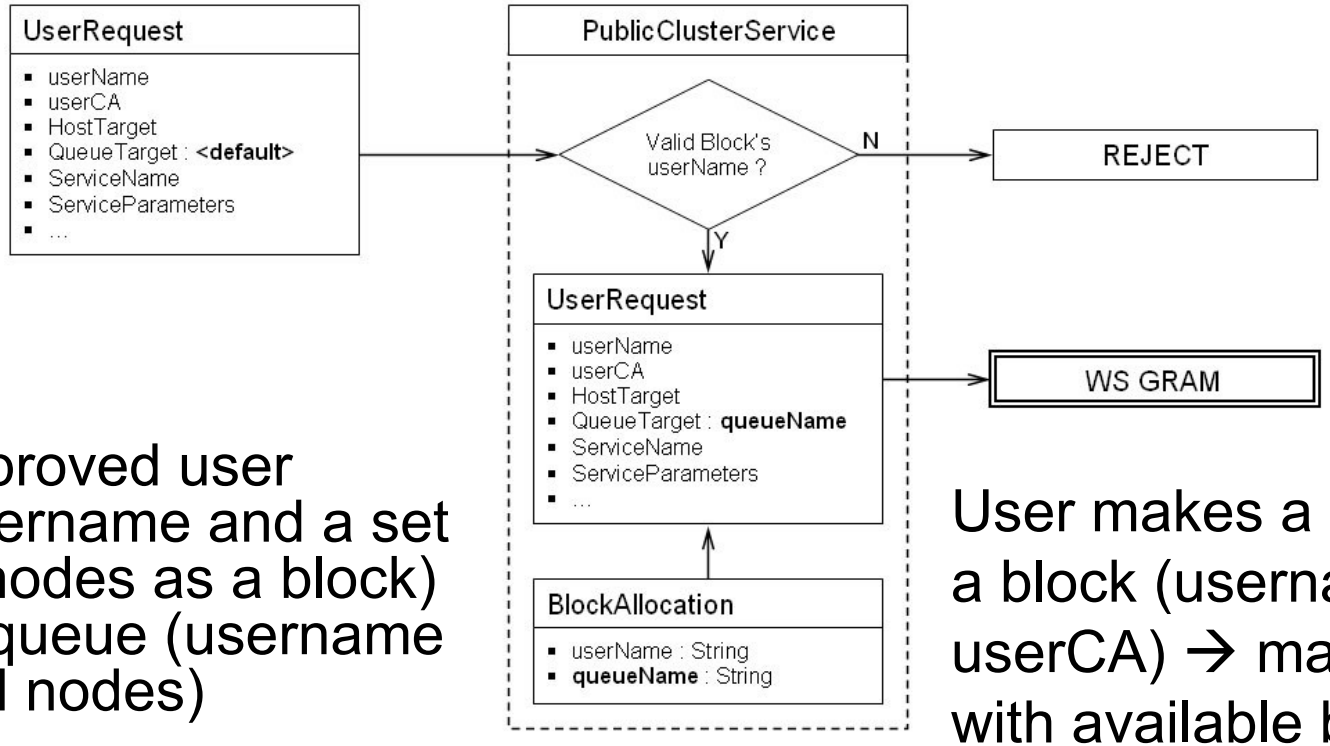

1

Approved user (username and a set of nodes as a block) → queue (username and nodes)

2

User makes a request to a block (username and userCA) → mapping it with available blocks

final_request = initial_request + queue_name

3

Illustration

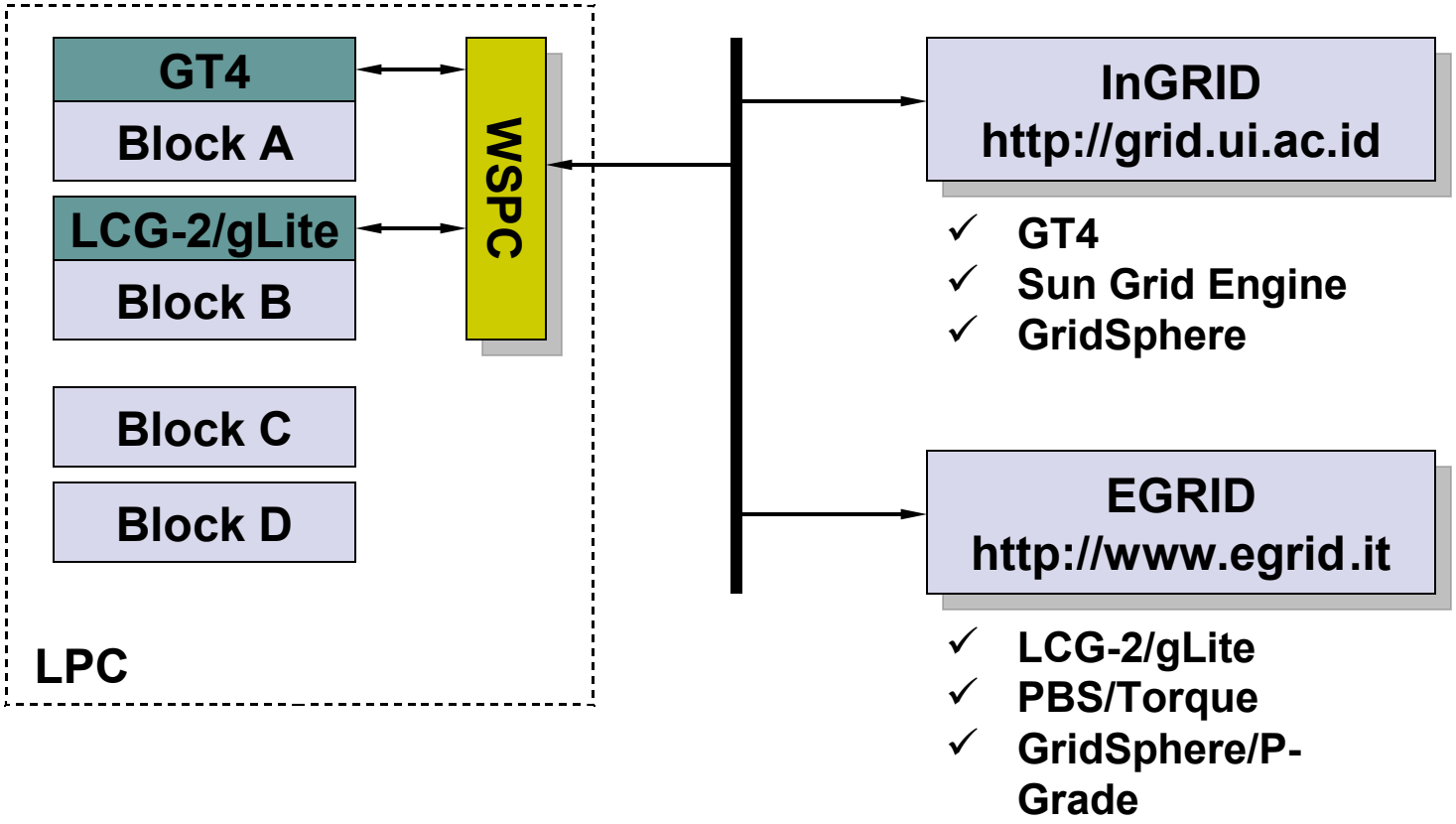

Summary

- We have introduced a new architecture for grid computing using public clusters with a characteristic like LPC → consists of the standard Grid Middleware and an additional web service (WSPC)
- WSPC has a role as an intermediate interface to authenticate the digital certificate in a request, to retrieve the username and finally to map it with the queue name associated with particular block
- Different Parallel and Grid Middleware can be used simultaneously in separate blocks → It is argued that this architecture keeps the freedom and flexibility for users
- As future work and issue, to improve the authentication process and web-based interface for LPC-model Grid Management System

Thank You

- This work is financially supported by the Riset Kompetitif LIPI in fiscal year 2008 under Contract no. 11.04/SK/KPPI/II/2008.

LIPI Public Cluster

http://www.cluster.lipi.go.id