Web-based Interface in Public Cluster

Z. Akbar and L.T. Handoko
Group for Theoretical and Computational Physics
Research Center for Physics
Indonesian Institute of Sciences

Background .

- Motivated by real needs for high performance and advanced computing, especially in the research field of basic natural sciences.
- Even in Indonesia, the needs are growing along with the advances of scientific researches.
- Parallel / cluster machine → the low specs (and low cost) machines that working together to solves a computing problem.

Background ..

- In general a cluster is designed to perform a single (huge) computational task at certain period.
- This makes the cluster system is usually exclusive and not at the level of appropriate cost for most potential users, neither young beginners nor small research groups, especially in the developing countries like Indonesia.

Our Motivates

- No need to say about educating young generations to be the future users familiar with parallel programming → motivates us to further develop an open and free cluster environment for public → LIPI Public Cluster (LPC)
- Here ”open” means everyone can access and use it anonymously for free to execute any types of parallel programming.

Main Objective

- Concerning its main objective as a training field to learn parallel programming, the public cluster should be :
  - accessible and user-friendly for all users with various level of knowledge on parallel programming.
  - have enough flexibility regarding various ways of accessing the system in any platforms as well.
- This can be achieved by deploying web-based interfaces in all aspects.

Challenging Requirements

- Security :
  - Users have enough privileges and freedom to learn parallel programming, while their access must be limited at the maximum level for the sake of security.
- Flexibility :
  - Allow as much as possible users to execute their codes on cluster → there should be a freedom on assigning the number of nodes for each user.
- Stability :
  - Simultaneous executions by different users with various jobs in cluster without any interferences among them.
- Efficiency :
  - Each node should be able to be completely turned on or off partially without any interruptions to another working nodes.

LPC Architecture

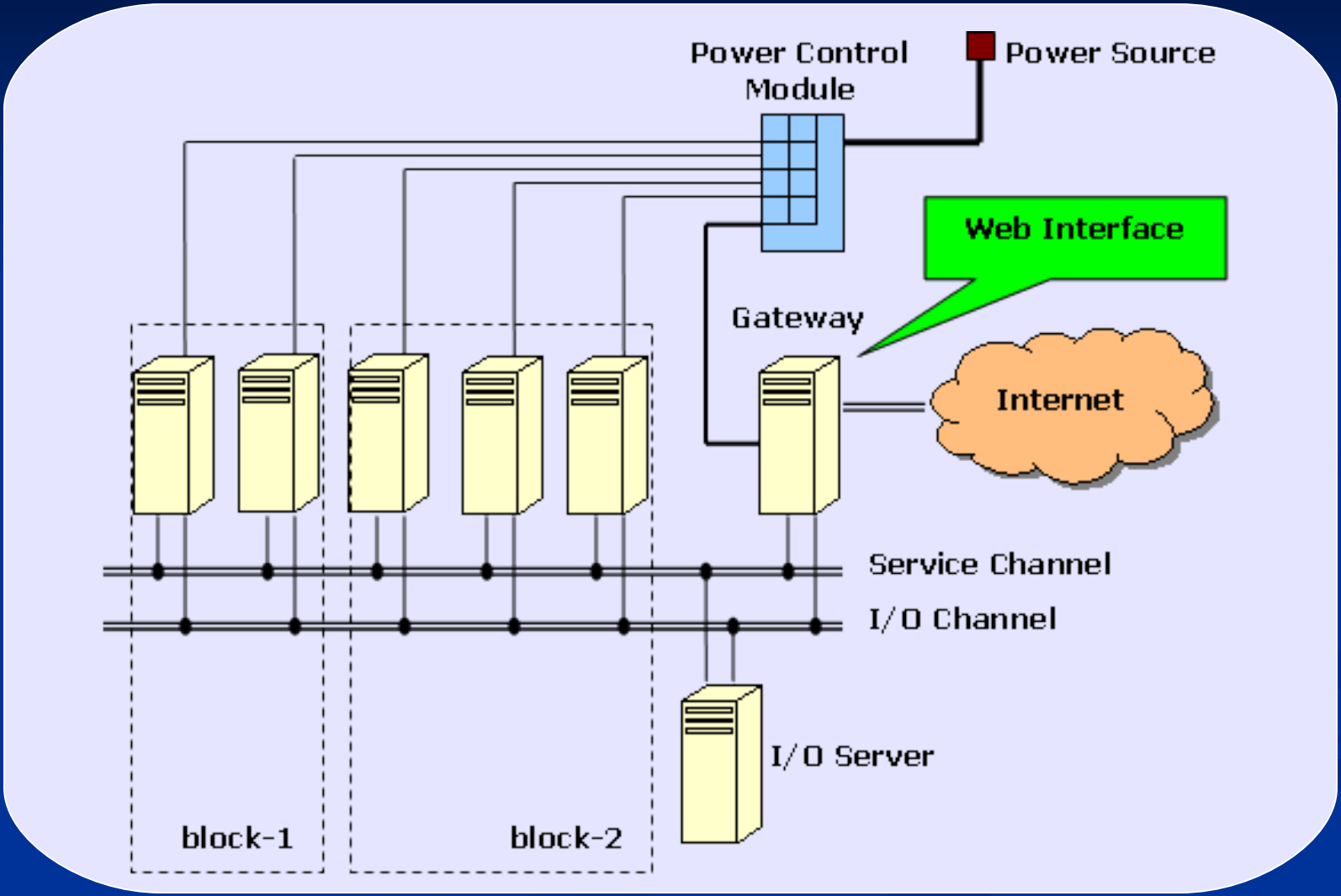

Cluster Access Methods

- SSH
  - Remote Login.
  - Do Not Allowed in Some Networks for Security Reason.
- Virtual Network Computing
  - Remote Network Access.
  - Need Server and Client Software (Viewer).
  - Full Access, controlling a remote computer just as sitting in front of it.
- LPC Web-Interface
  - Upload and Running programs
  - Download Results
  - Controlling
  - Monitoring
  - Limited Access
  - All Access through Web-Browser

Web-based Interface

- Accommodate the needs of any parallel programming which vary and change along the time → as flexible as possible to guarantee its compatibilities in the future.
- Any future modifications in the web application must not alter another software components.

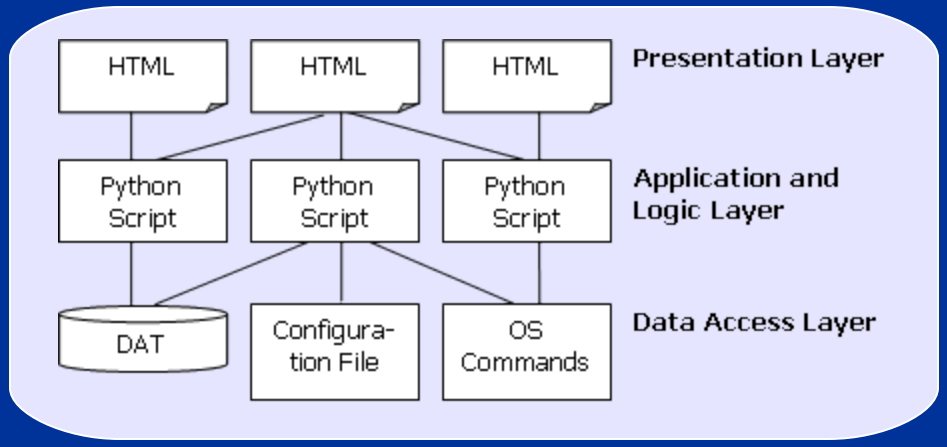

- Adopting three-tier software architecture.
- Appropriate for distributed client/server applications which require high performances in terms of flexibility, maintainability, reusability and scalability, while at the same time it simplifies the complexities of users' distributed processes.

Integrating All

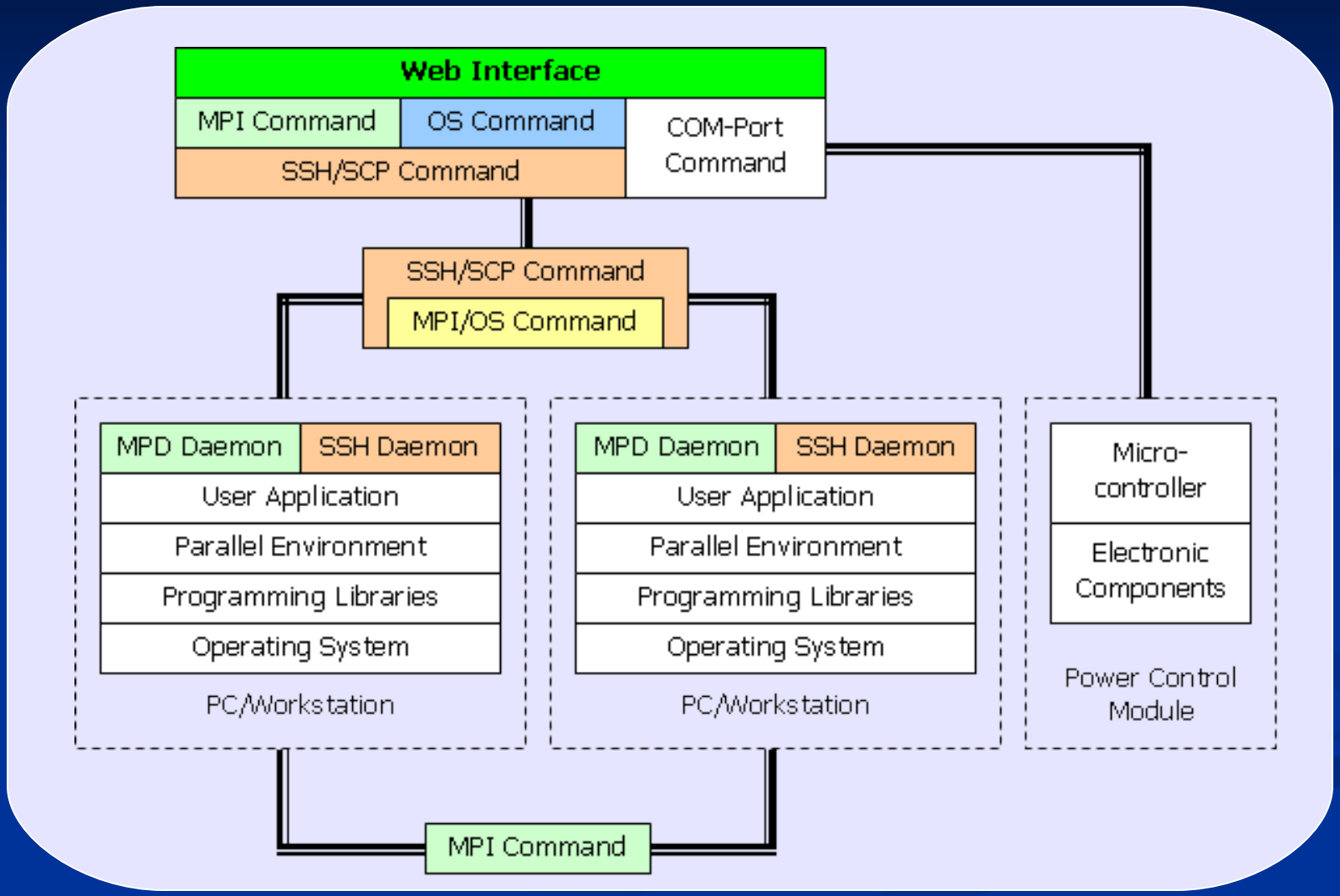

LPC Usage

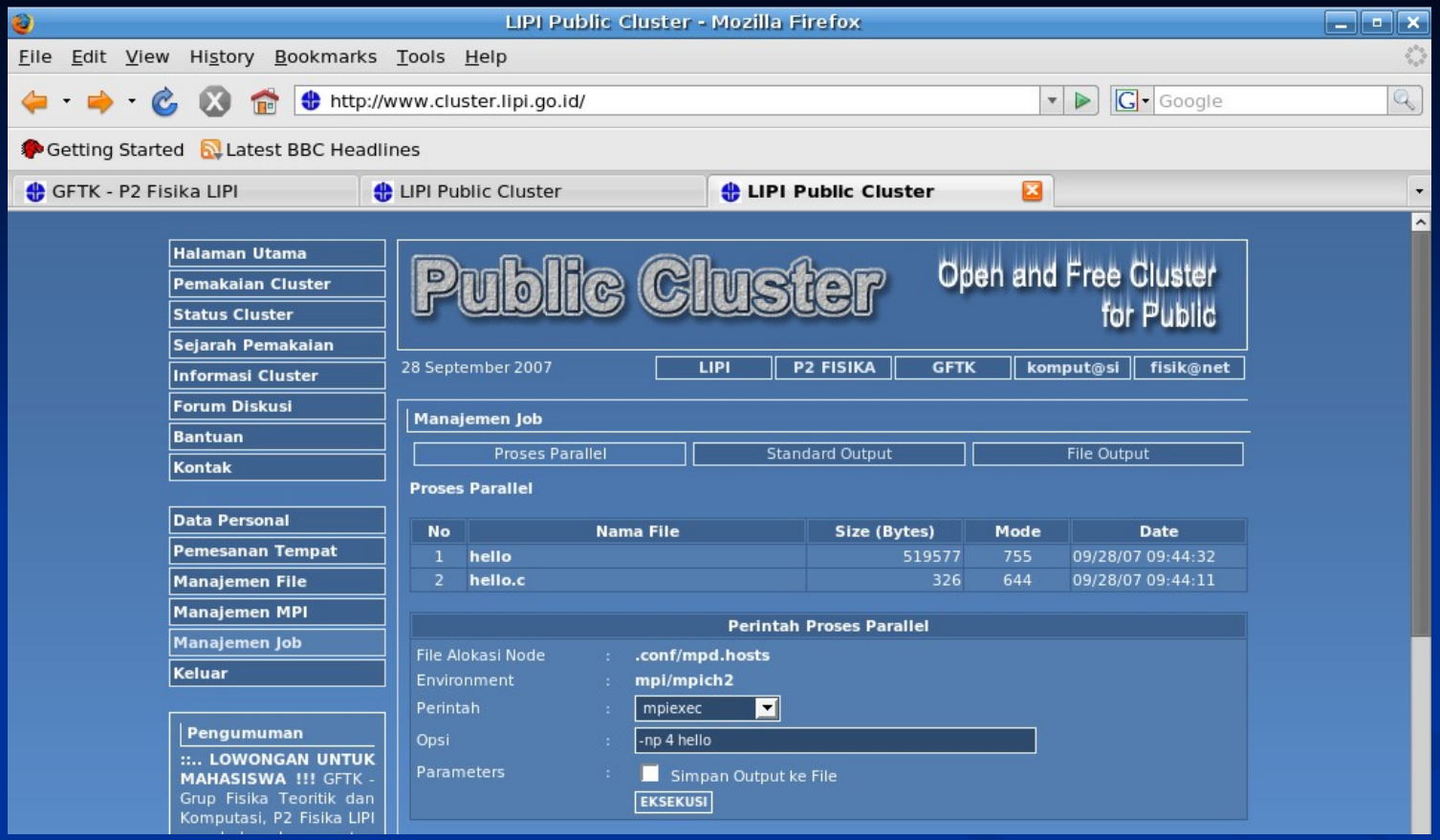

- Registered users : 66 (November 24, 2007)
- Students : 29 (43,94 %) → definitely proven the usability of the system by (mostly) beginners in parallel programming.
- FAQ : how to decompose/manage jobs ? → Parallel Programming Problems

Conclusion

- We have introduced the web-interface in LPC which integrates all aspects of its hardware and software.
- Although web-based interfaces in clusters are commonly known and actively developed by many groups, the web-interface for public clusters is quite unique and requires more careful developments.
- Moreover, in any existing conventional clusters, the web-interfaces are moreless complementary tools. While in public clusters like LPC, the web-interface is very crucial and the only solution to make it open for public.

Thank You

- This work is financially supported by :
  - Riset Kompetitif LIPI in fiscal year 2007 under Contract no. 11.04/SK/KPPI/II/2007
  - Indonesia Toray Science Foundation Research Grant 2007

- Visit LIPI Public Cluster at :

http://www.cluster.lipi.go.id